END OF LIFE

LC-9500HR

GK46-00005-XXXX

S/N 199208 - 202685

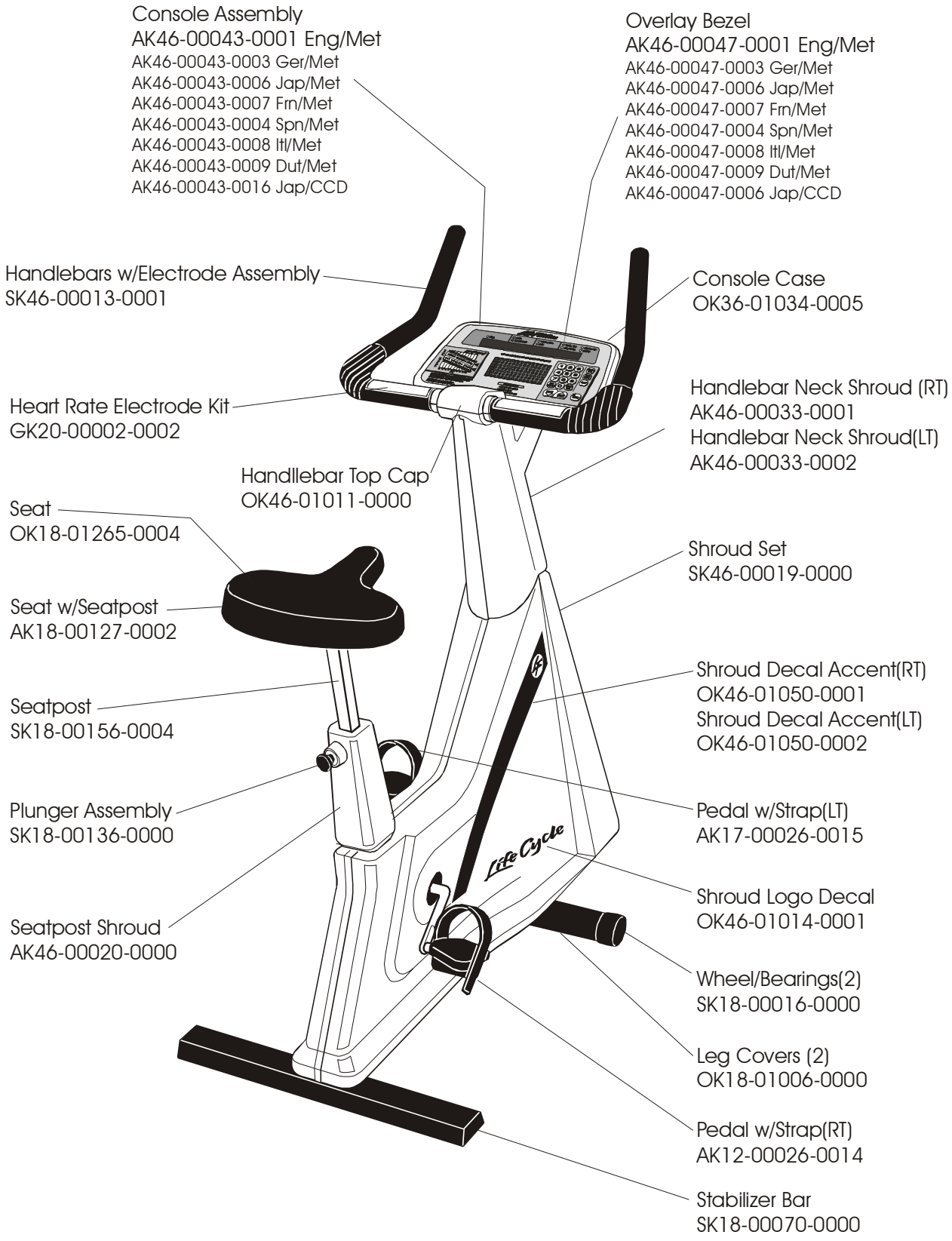

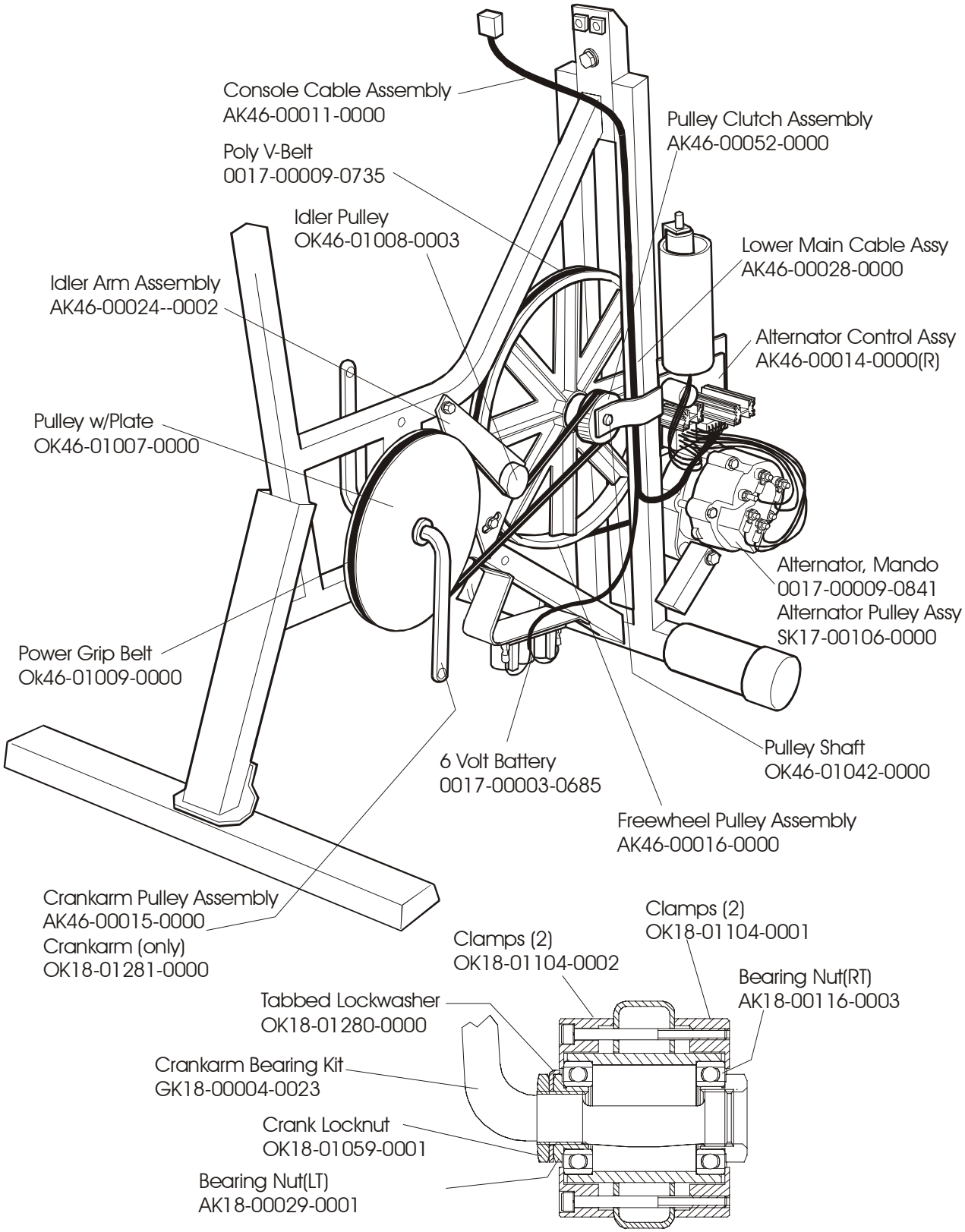
Console Cable Assembly
AK46-00011-0000
Poly V-Belt
0017-00009-0735
Idler Pulley
OK46-01008-0003
Idler Arm Assembly
AK46-00024--0002
Pulley w/Plate
OK46-01007-0000
Power Grip Belt
Ok46-01009-0000
Pulley Clutch Assembly
AK46-00052-0000
Lower Main Cable Assy
AK46-00028-0000
Alternator Control Assy
AK46-00014-0000(R)
Alternator, Mando
0017-00009-0841
Alternator Pulley Assy
SK17-00106-0000
Pulley Shaft
OK46-01042-0000
6 Volt Battery
0017-00003-0685
Freewheel Pulley Assembly
AK46-00016-0000
Crankarm Pulley Assembly
AK46-00015-0000
Crankarm (only)
OK18-01281-0000
Clamps (2)
OK18-01104-0001
Clamps (2)
OK18-01104-0002
Bearing Nut(RT)
AK18-00116-0003
Tabbed Lockwasher
OK18-01280-0000
Crankarm Bearing Kit
GK18-00004-0023
Crank Locknut
OK18-01059-0001
Bearing Nut(LT)
AK18-00029-0001